Index	Name	L [mm]	Lg [mm]	Weight [g]
	PBK M10x60	60	25	45,56
	PBK M10x65	65	30	48,63
	PBK M10x70	70	35	51,69
37210075	PBK M10x75	75	35	54,09
3721008	PBK M10x80	80	40	57,15
	PBK M10x85	85	45	60,22
3721009	PBK M10x90	90	50	63,28
	PBK M10x95	95	55	92,73
3721010	PBK M10x100	100	55	68,74
	PBK M10x105	105	55	71,14
	PBK M10x110	110	60	74,2
	PBK M10x115	115	60	76,6
3721012	PBK M10x120	120	60	79
	PBK M10x125	125	65	82,06
	PBK M10x130	130	70	85,13
	PBK M10x135	135	75	88,19
3721014	PBK M10x140	140	80	91,25
	PBK M10x145	145	85	94,32
	PBK M10x150	150	90	97,38
	PBK M10x155	155	95	100,44
	PBK M10x160	160	100	103,51
	PBK M10x165	165	100	105,9
3721017	PBK M10x170	170	100	108,3
	PBK M10x175	175	100	110,7
	PBK M10x180	180	100	113,1
	PBK M10x185	185	100	115,5
	PBK M10x190	190	100	117,9
	PBK M10x195	195	100	120,3
3721020	PBK M10x200	200	100	122,7
	PBK M10x205	205	100	125,1
	PBK M10x210	210	100	127,5
	PBK M10x215	215	100	129,89
	PBK M10x220	220	100	132,29

This document is the absolute property of DOMAX Sp. z o.o. This document must not be copied without the written permission of DOMAX Sp. z o.o. The contents thereof must not be disclosed to a third party nor be used for any unauthorized purpose. Contravention will be prosecuted.

Revsion				
Rev.	Explanation	Data	Revised by	Approved by

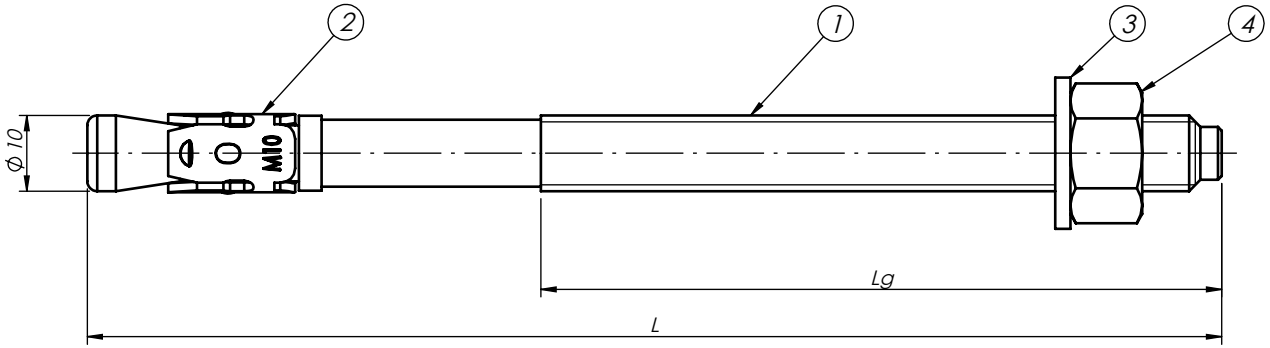

Note:
1. General tolerances EN 22768 mK.

Pos.	No.	Name	Description	Material	Weight
4	1	Nut	M10-5 DIN934-Zn	Carbon steel	9,0[g]
3	1	Washer	M10 DIN 125-Zn	Carbon steel	4,0[g]
2	1	Mechanical fastener - plate	PBK M10-B	Carbon steel	3,19[g]
1	1	Mechanical fastener M10-rod	PBK M10-P	Carbon steel	-

Design: D.Kozłowski	Checked: -		Approved: -	Note: -
Drawn: D.Kozłowski	Format: A4	Scale: 1:1	Material:	Weight: -
Index	Date: 13.10.2023	Mechanical fastener M10		Sheet 1/1
domax DOMAX Sp. z o.o.		PBK M10		Rev 0